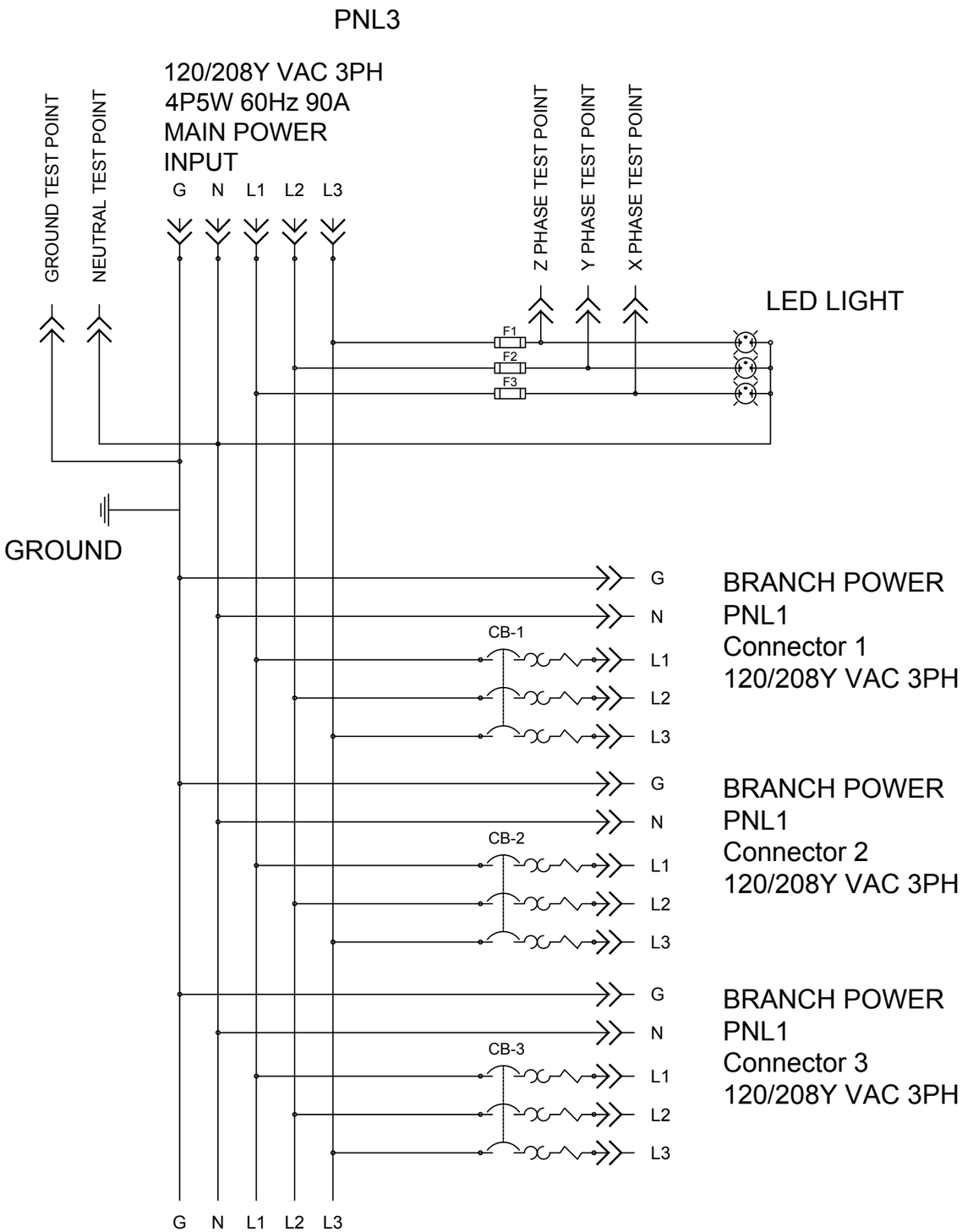

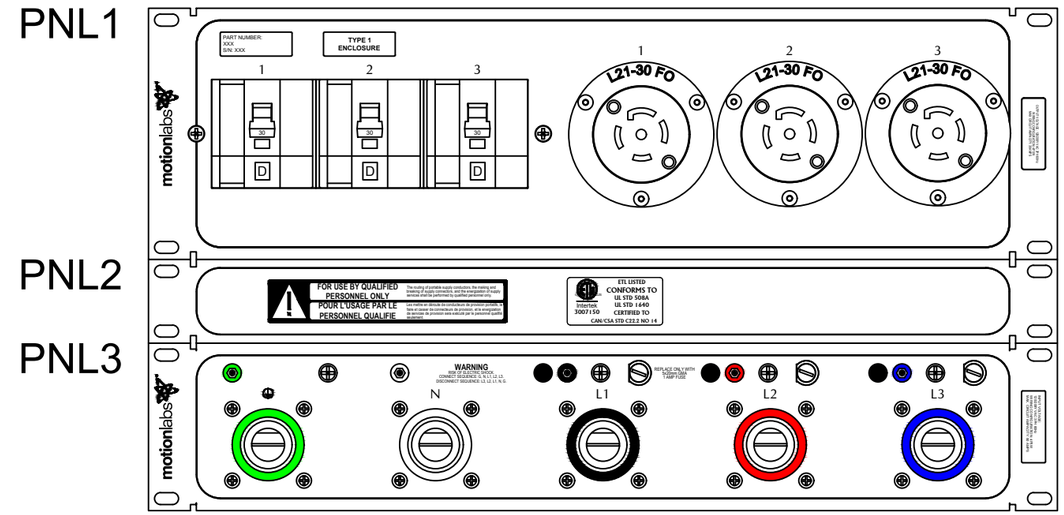

REV	DESCRIPTION	DATE	APPROVED
A	ORIGINAL RELEASE. AJS 3/5/20	3/5/20	JK

motionlabs
520 Furnace Dock Road Cortlandt Manor, NY 10567

Copyright © 2020 motion labs™, Inc. All Rights Reserved. THIS DOCUMENT IS THE EXCLUSIVE, CONFIDENTIAL PROPERTY OF MOTION LABORATORIES, INC. IT MAY NOT BE REPRODUCED, COPIED, OR USED FOR ANY PURPOSE WHATSOEVER, UNLESS, AND STRICTLY TO THE EXTENT, SUCH IS EXPRESSLY AUTHORIZED BY MOTION LABORATORIES, INC. IN WRITING.

TITLE: SCHEMATIC

DRAWN BY	DATE DRAWN	SIZE	DRAWING NUMBER	REV
AJS	3/5/20	D	1300-000-06-1-08	A
CHECKED BY	DATE CHECKED			
JK	3/5/20			

MODEL FILENAME & PATH: N:\Engineering\Schematics\Final Assembly\1300-000-06-1-08.s.dwg

SHEET 1 OF 1