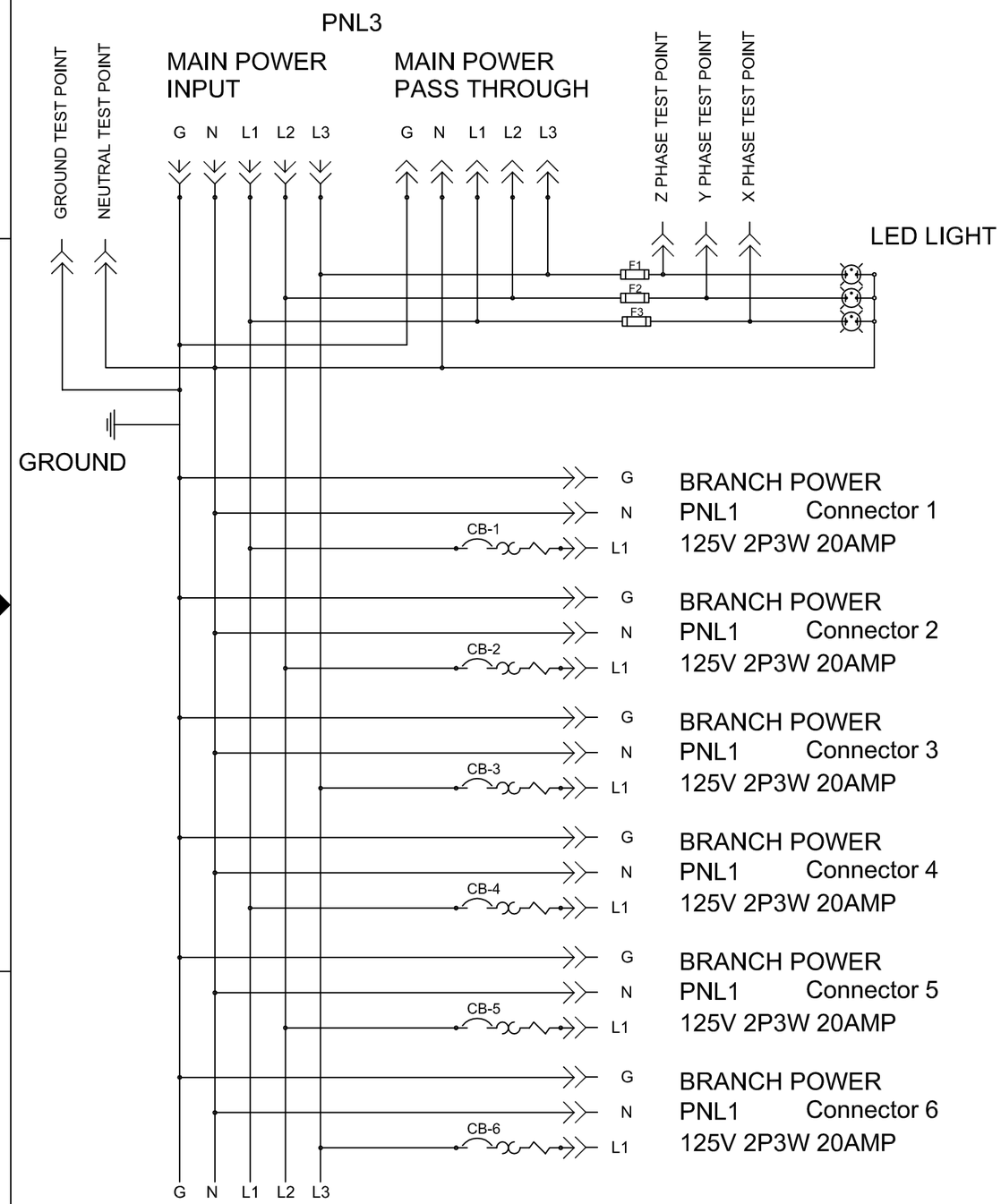

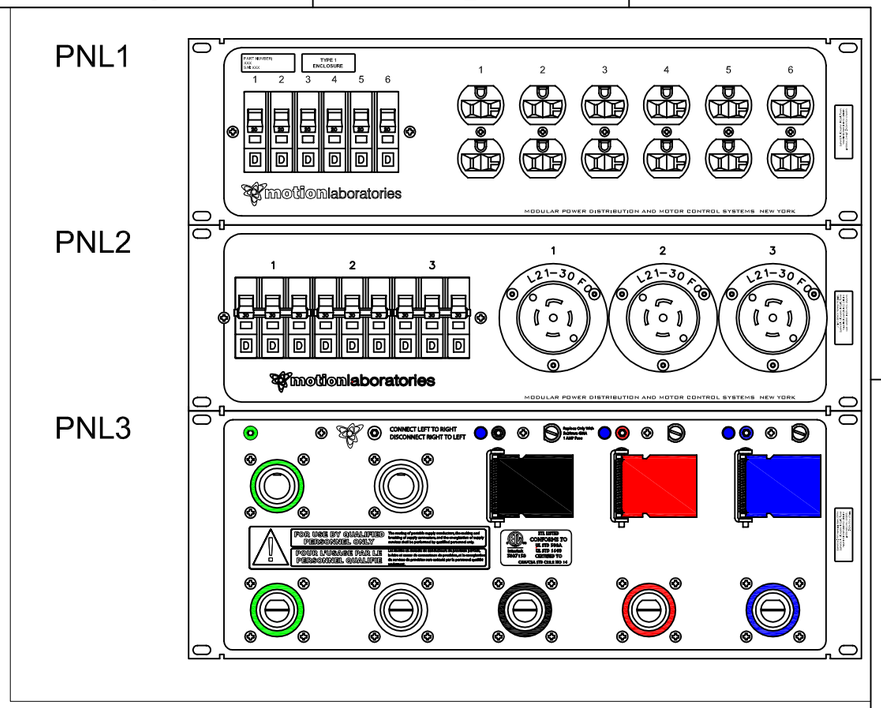

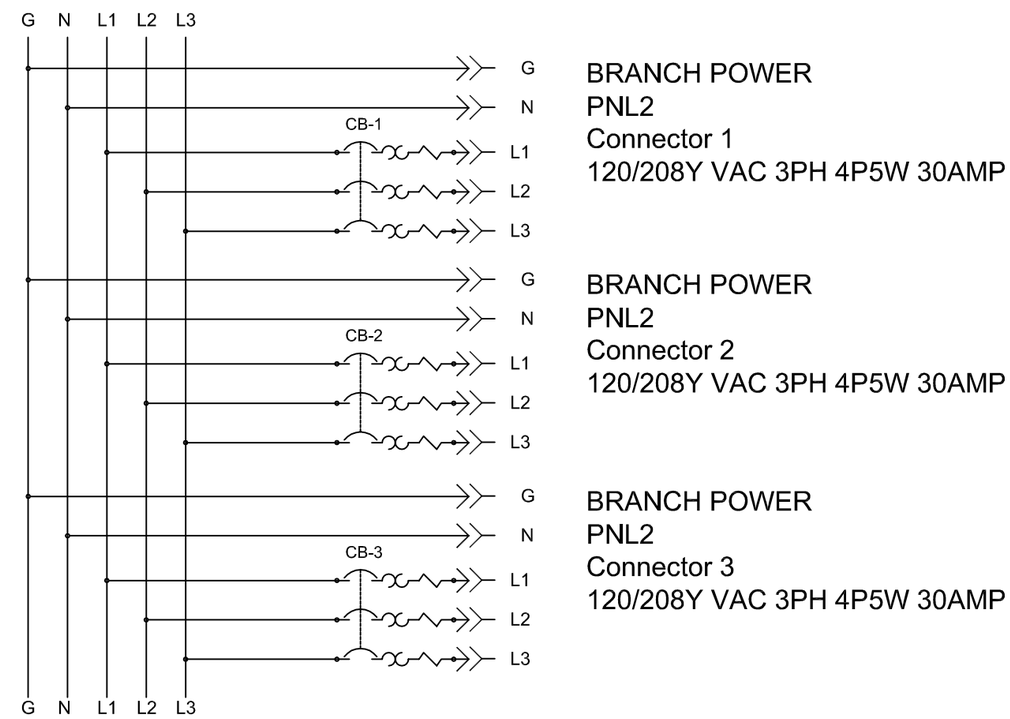

REV	DESCRIPTION	Date	APPROVED
A	ORIGINAL RELEASE JK 4/4/14	4/4/14	DH

motionlaboratories
520 FURNACE DOCK ROAD
CORTLANDT MANOR, NY 10567
(914) 788-8877

TITLE: Schematic

SIZE	Checked By:	DWG NO.	REV
D	DH	1300-000-10-1-05	A
	Drawn By: JK	Sheet 1 OF 1	