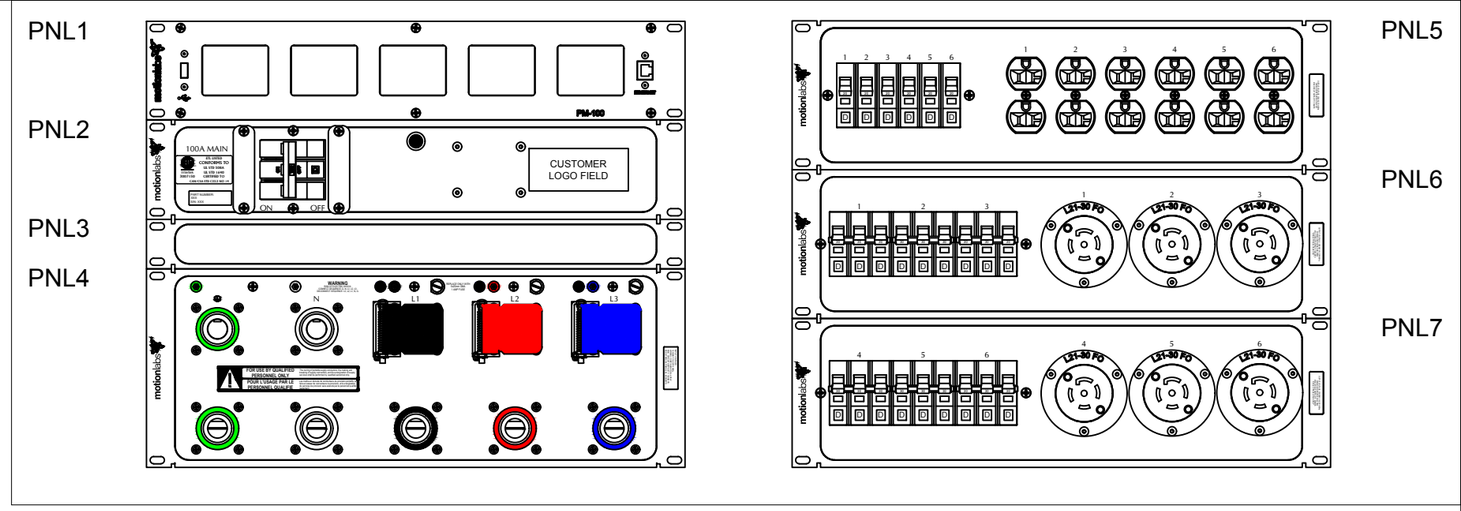


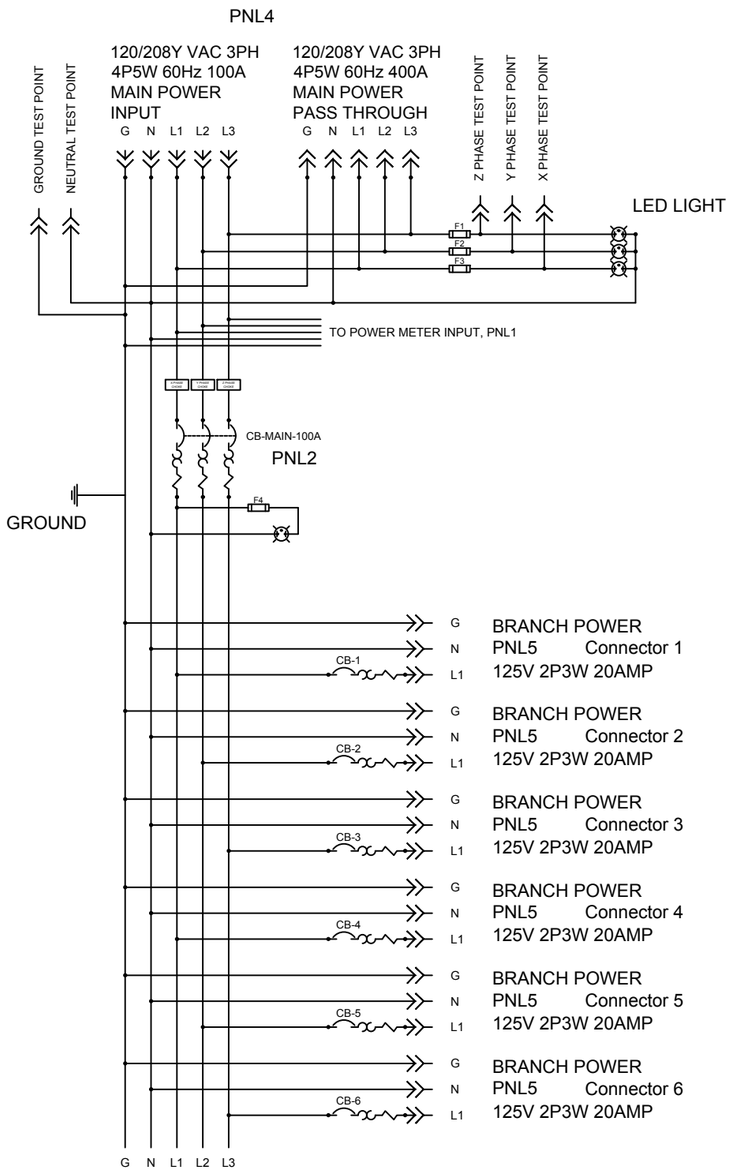


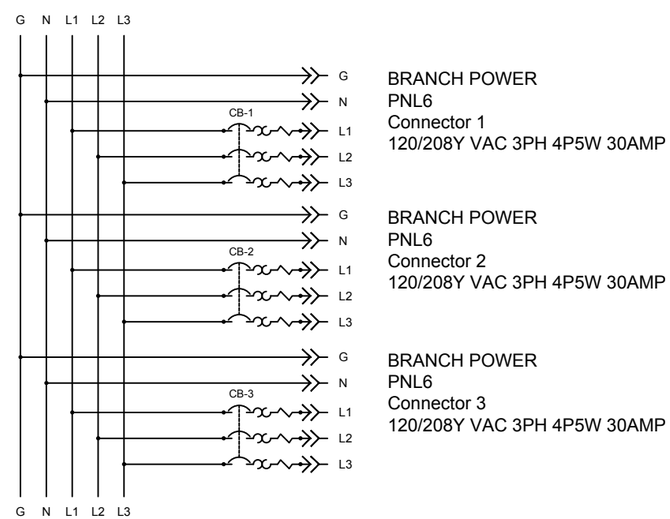


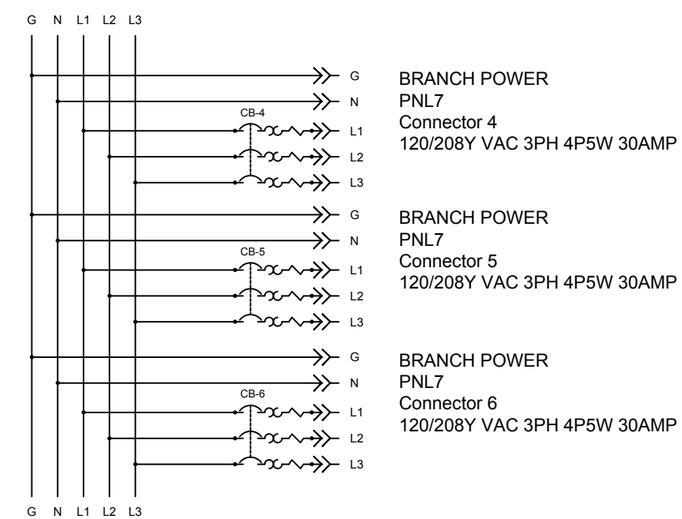


| REV | DESCRIPTION | DATE | APPROVED |
|---|---|---|---|
| E | UPDATED VIEWS. JK 5/27/21 | 6/1/21 | DC |

motionlabs
520 Furnace Dock Road Cortlandt Manor, NY 10567

Copyright 2006 Motion Laboratories, Inc. All Rights Reserved. THIS DOCUMENT IS THE EXCLUSIVE, CONFIDENTIAL PROPERTY OF MOTION LABORATORIES, INC. AND IT SHALL NOT BE REPRODUCED, COPIED, OR USED FOR ANY PURPOSE WHATSOEVER, UNLESS, AND STRICTLY TO THE EXTENT, SUCH IS EXPRESSLY AUTHORIZED BY MOTION LABORATORIES, INC. IN WRITING.

TITLE: SCHEMATIC

| DRAWN BY | DATE DRAWN | SIZE | DRAWING NUMBER | REV |
|---|---|---|---|---|
| JC | 2/19/06 | D | 1300-100A-09-2-04 | E |
| CHECKED BY | DATE CHECKED | | | |
| PH | 2/19/06 | | | |

MODEL FILENAME & PATH: N:\Engineering\Schematics\Final Assembly\1300-100A-09-2-04.s.dwg

SHEET 1 OF 1