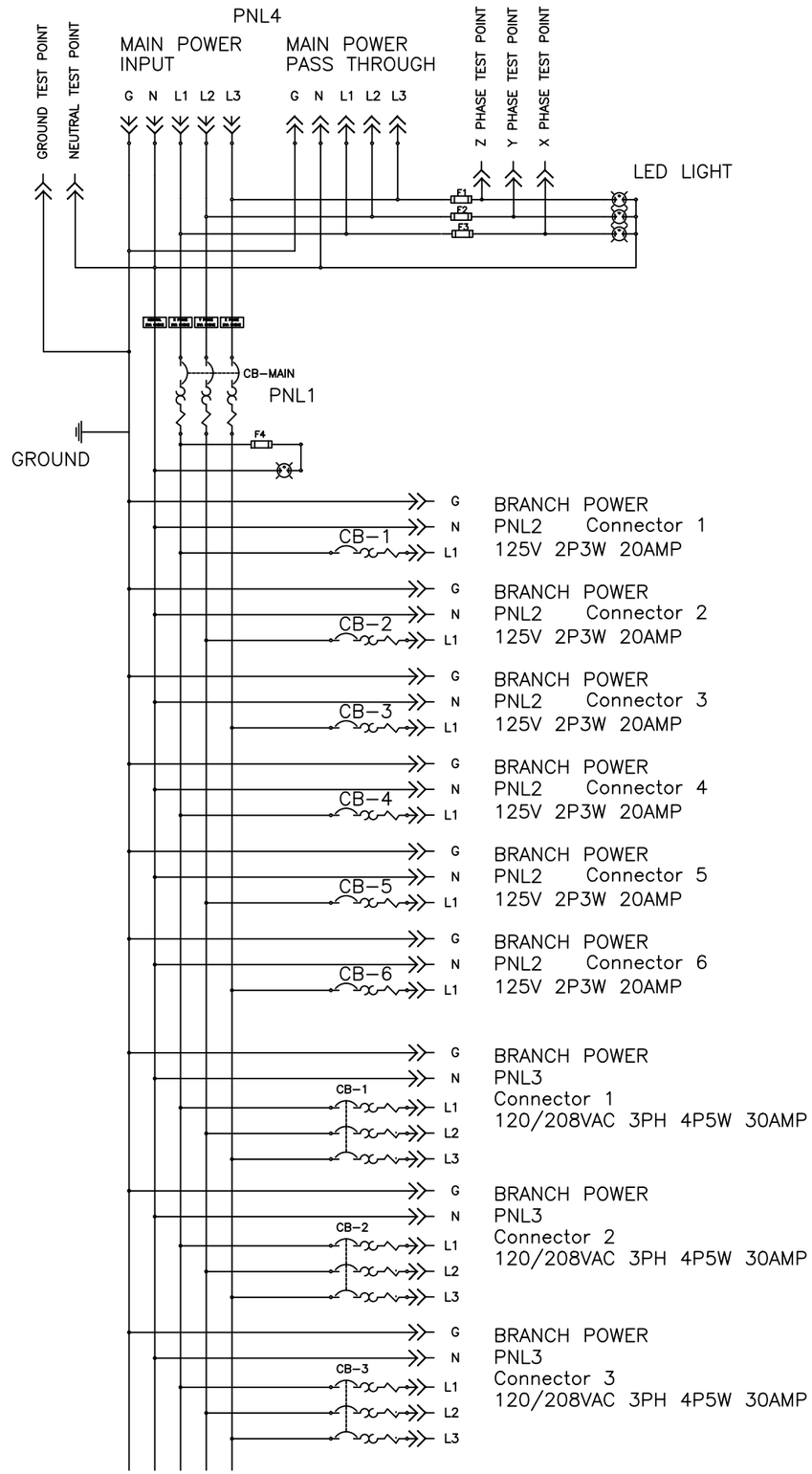

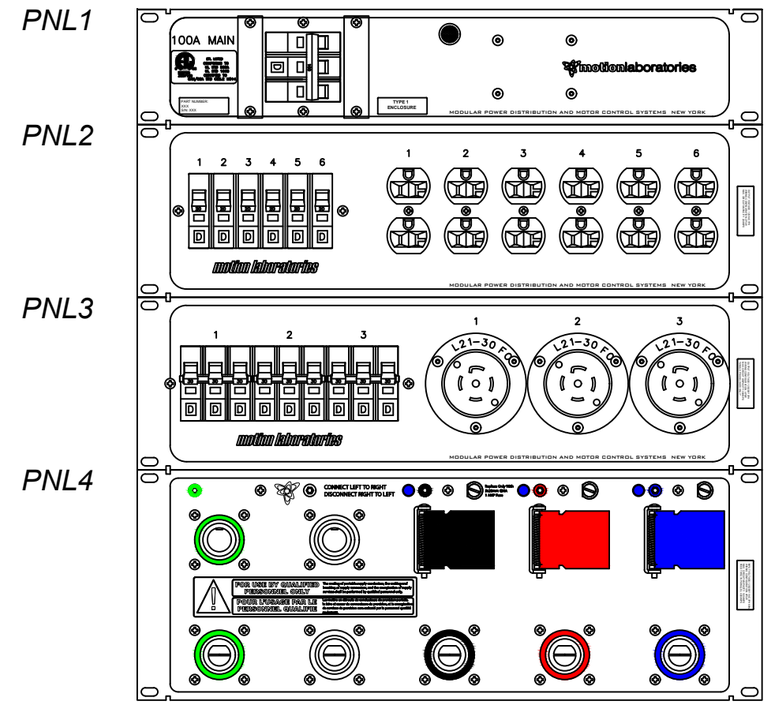

REV	DESCRIPTION	Date	APPROVED
A	Original Release	11/6/12	JC

motion laboratories
520 FUNACE DOCK ROAD
CORTLANDT MANOR, NY 10567
(914) 788-8877

TITLE: SCHEMATIC

SIZE	Checked By:	DWG NO.	REV
D	JC	1300-100A-12-1-03	A
Drawn By: JK		Sheet 1 of 1	