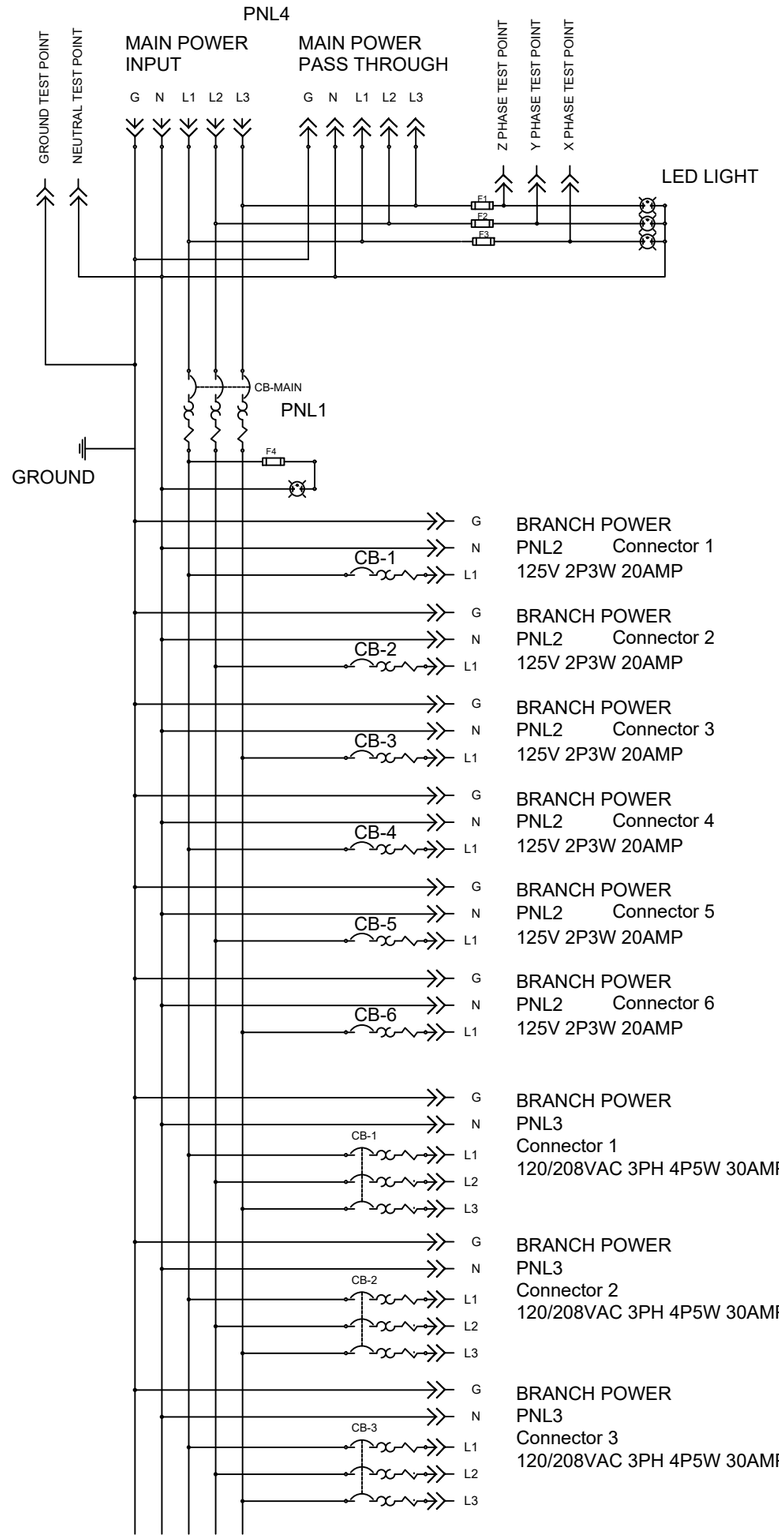

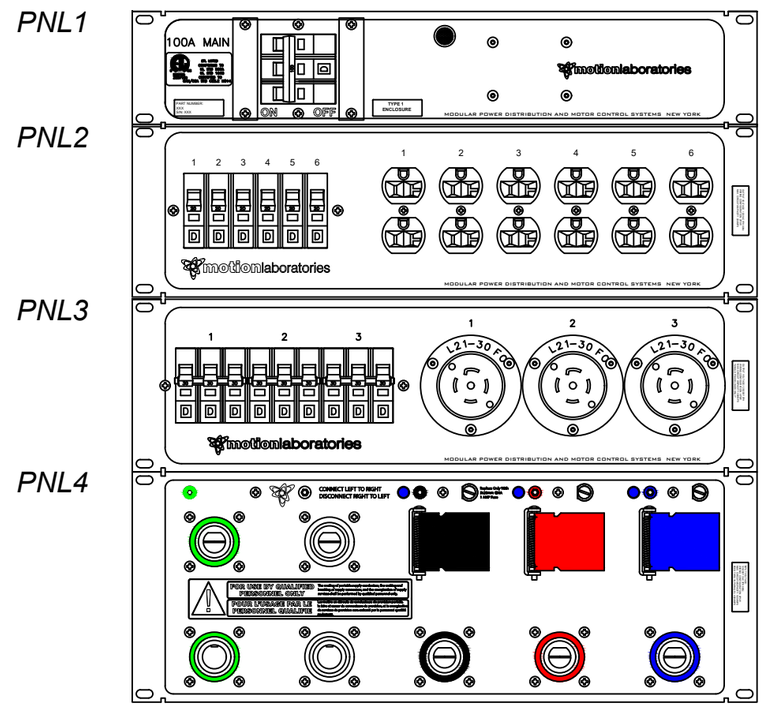

REV	DESCRIPTION	Date	APPROVED
A	Releases to Production 5/29/13	5/29/13	JK

motion laboratories
520 FUNACE DOCK ROAD
CORTLANDT MANOR, NY 10567
(914) 788-8877

TITLE: SCHEMATIC

SIZE	Checked By:	DWG NO.	REV
D	JK	1300-100A-12-1-04	A
	Drawn By: JC	Sheet 1 of 1	