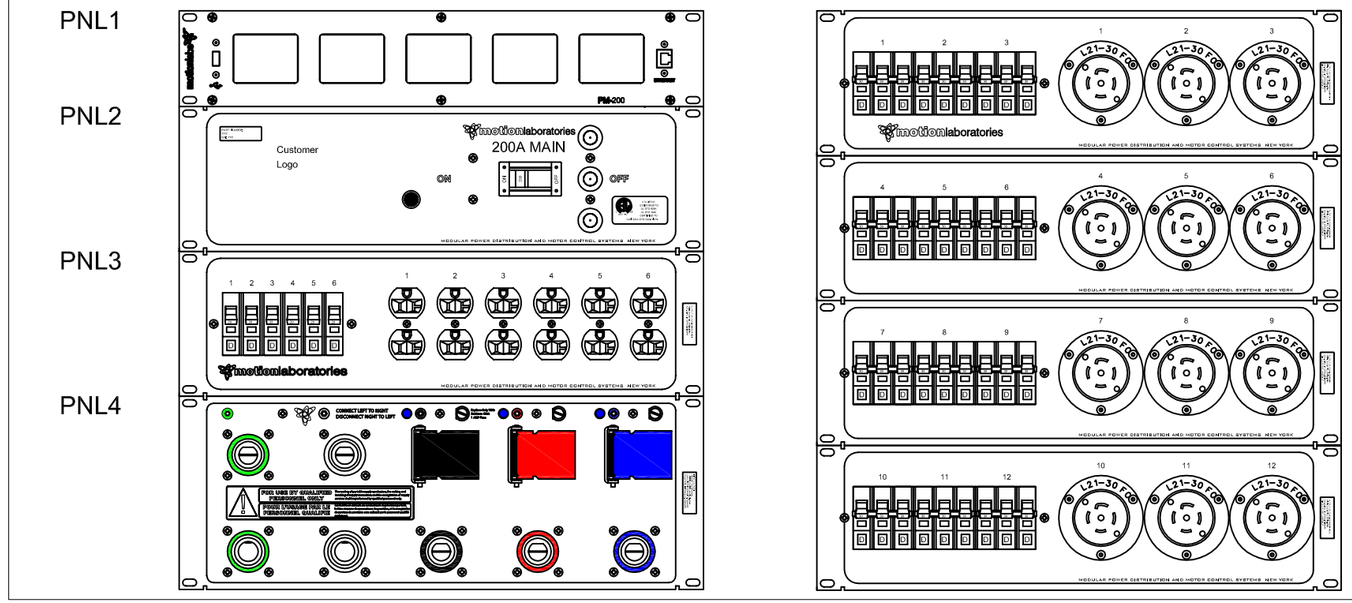

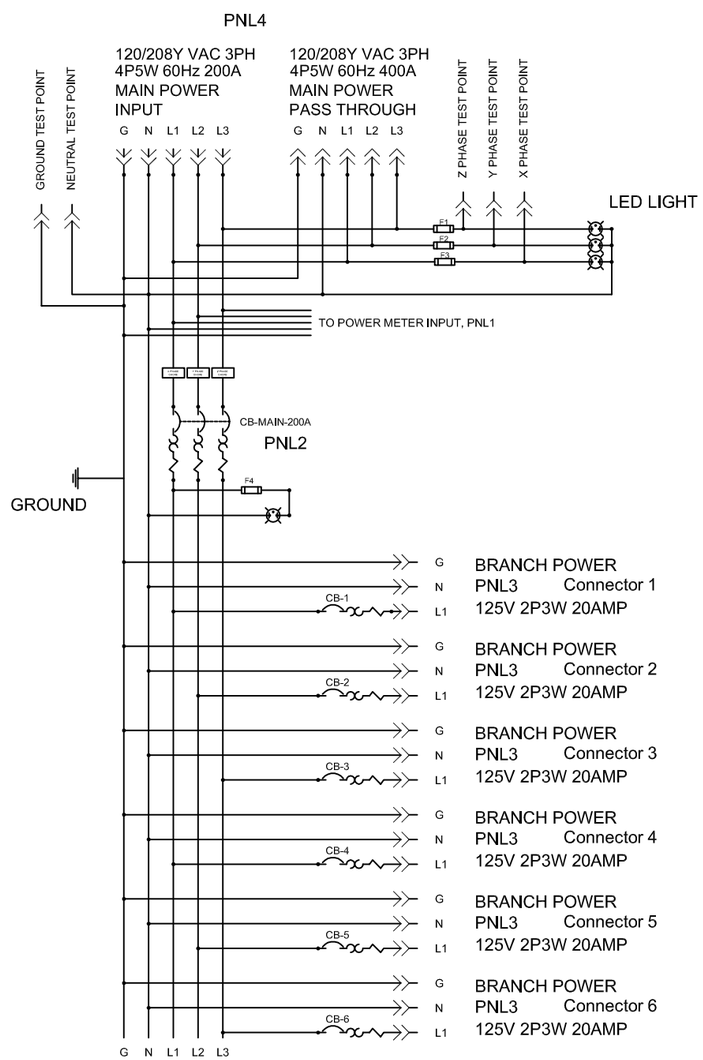

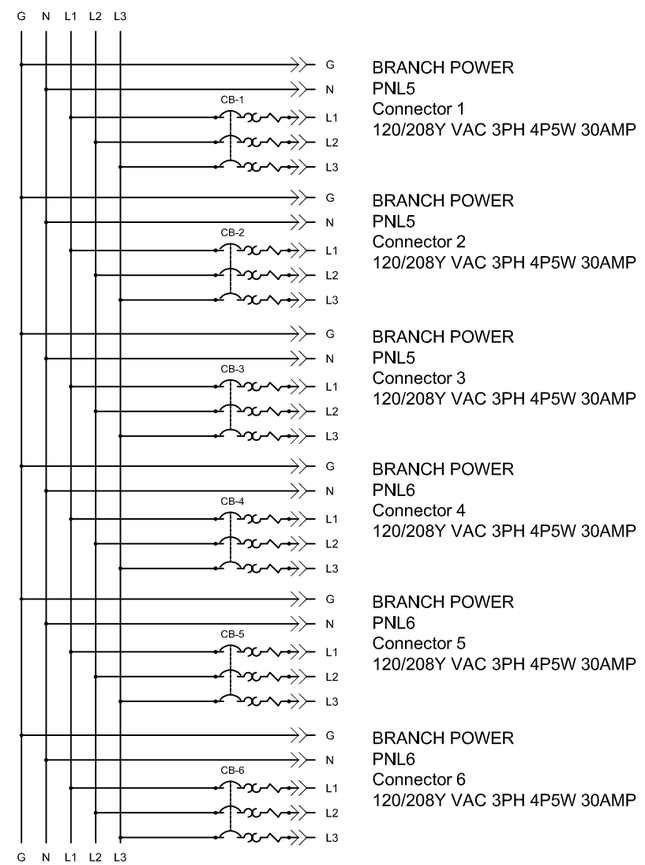

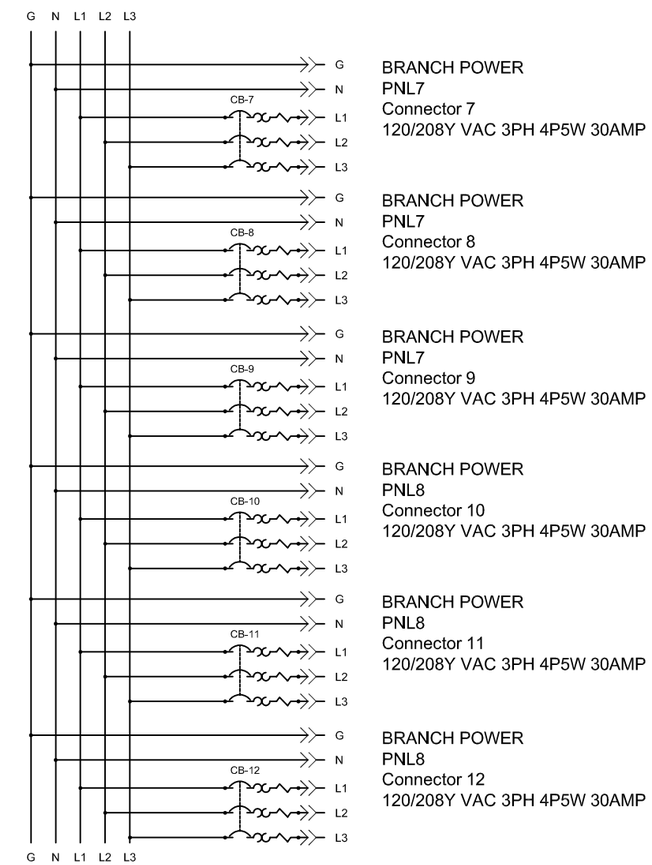

REV	DESCRIPTION	Date	APPROVED
D	UPDATED PER ECN-100 CT 5/2/2016	5/2/16	JK

motionlaboratories
520 FURNACE DOCK ROAD
CORTLANDT MANOR, NY 10567
(914) 788-8877

TITLE: SCHEMATIC

SIZE	Checked By:	DWG NO.	REV
D	PH	1300-200A-12-2-00	D
	Drawn By: JC	Sheet 1 OF 1	