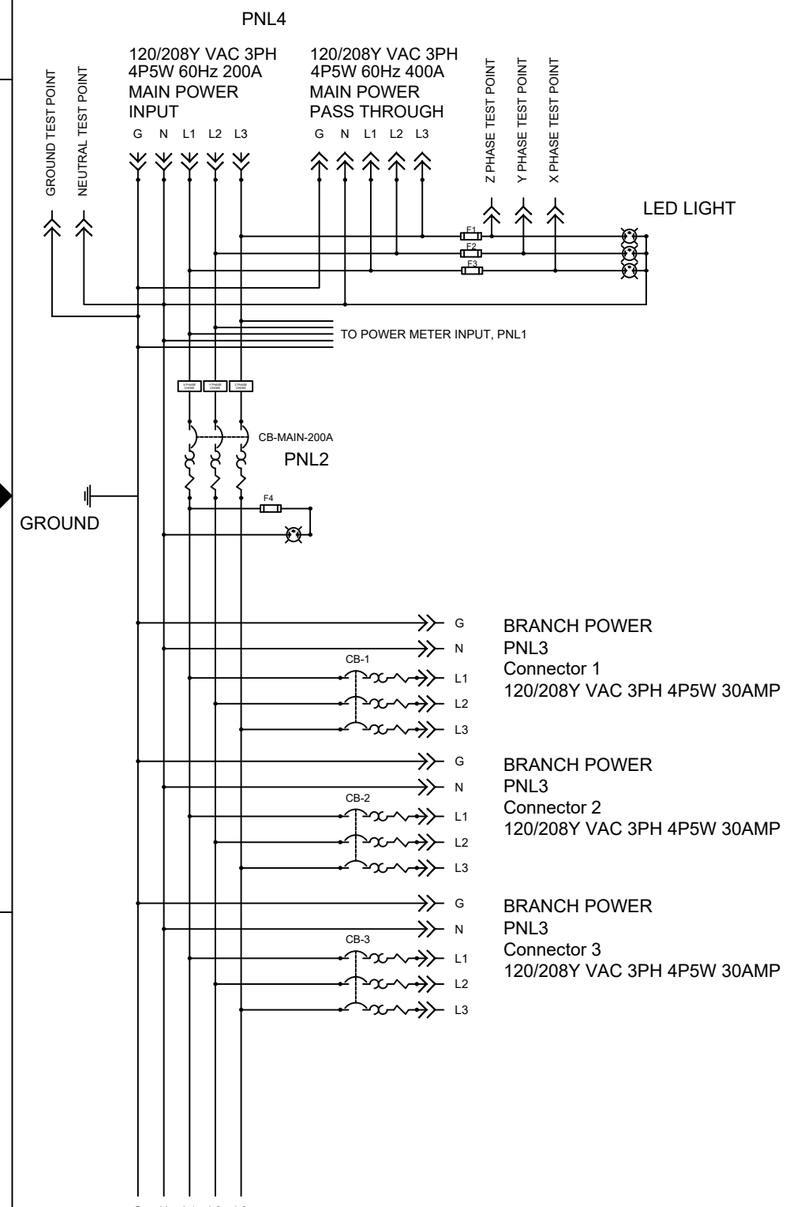

208VAC
6 CIRCUIT
20AMPS MAX

PINOUT: P19-04
1 = H CKT 1
2 = H CKT 1
3 = H CKT 2
4 = H CKT 2
5 = H CKT 3
6 = H CKT 3
7 = H CKT 4
8 = H CKT 4
9 = H CKT 5
10 = H CKT 5
11 = H CKT 6
12 = H CKT 6
13-19 = GROUND RING

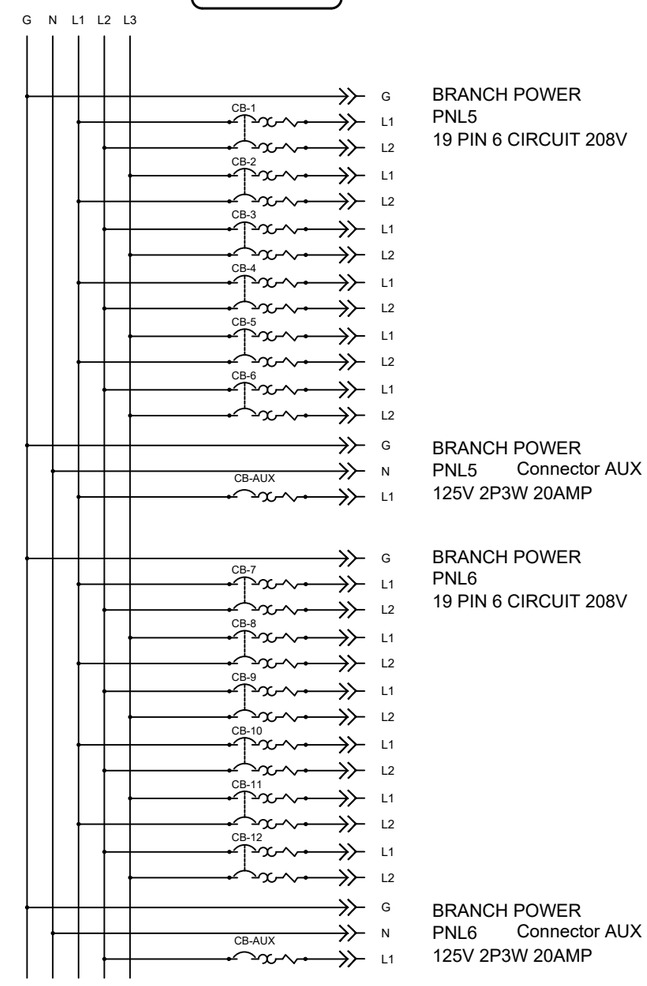

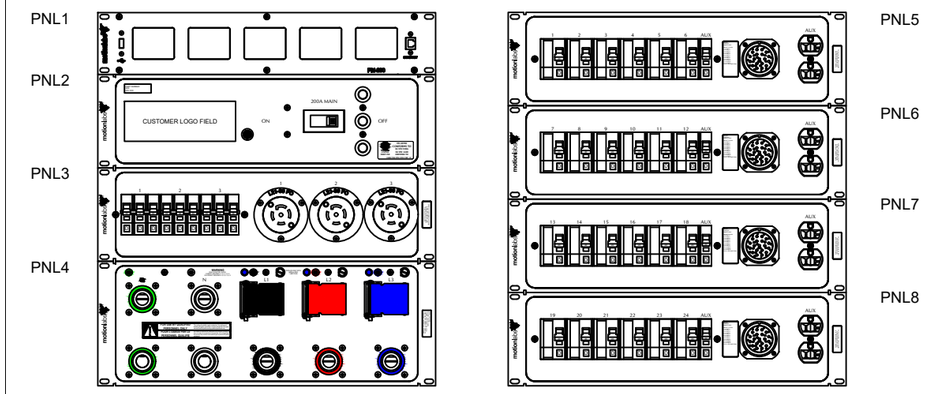

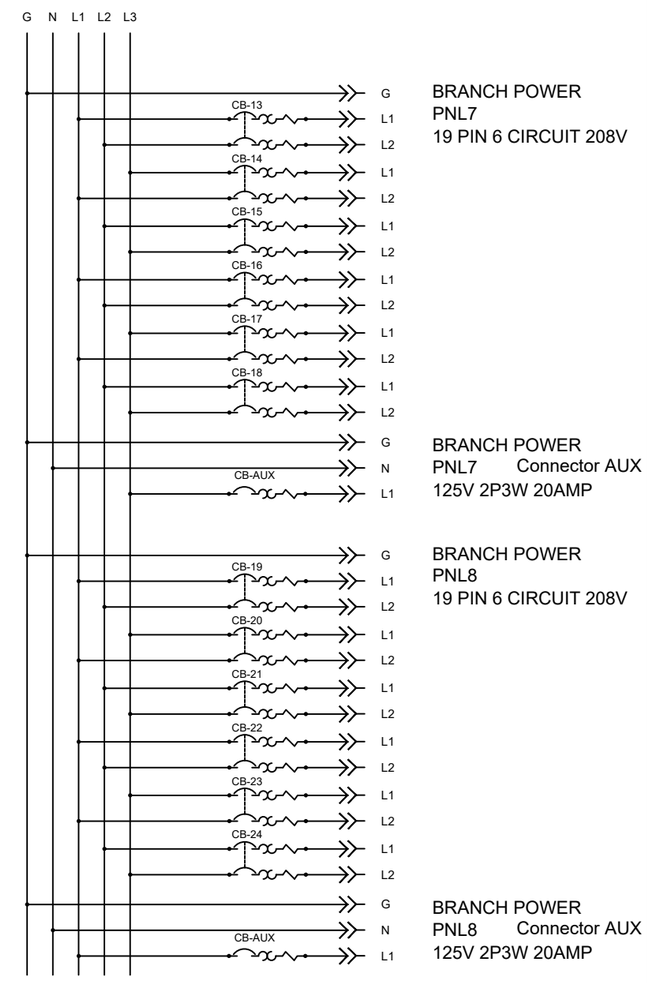

REV	DESCRIPTION	Date	APPROVED
B	WAS 1302-RMENTER-040816. DC 4/9/18	4/9/18	JK

motionlaboratories
520 FURNACE DOCK ROAD
CORTLANDT MANOR, NY 10567
(914) 788-8877

TITLE: SCHEMATIC

SIZE	Checked By:	DWG NO.	REV
D	DC	1300-200A-12-2-50	B
	Drawn By: JK	Sheet 1 OF 1	