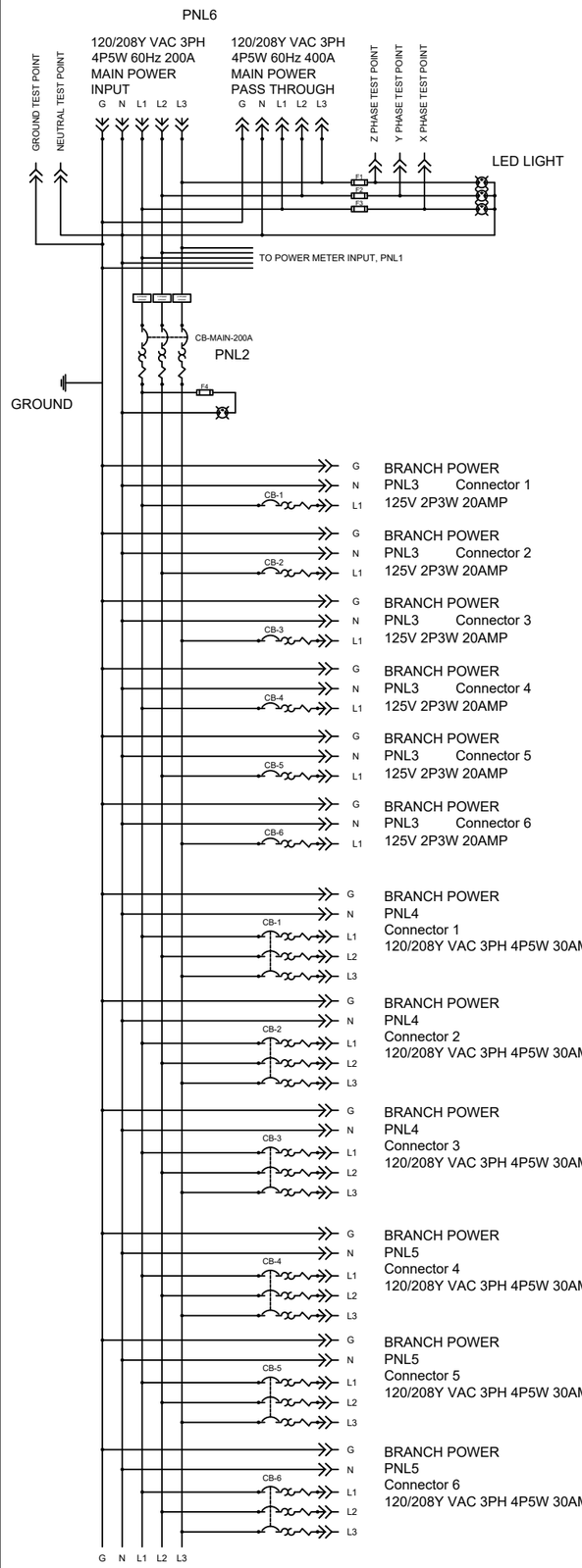

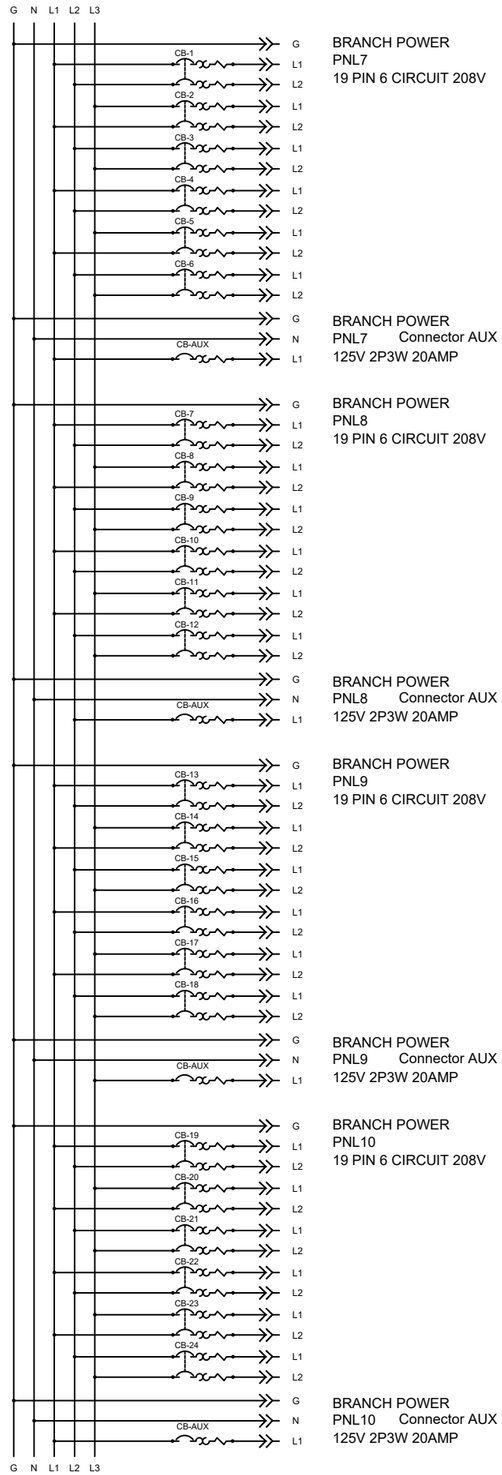

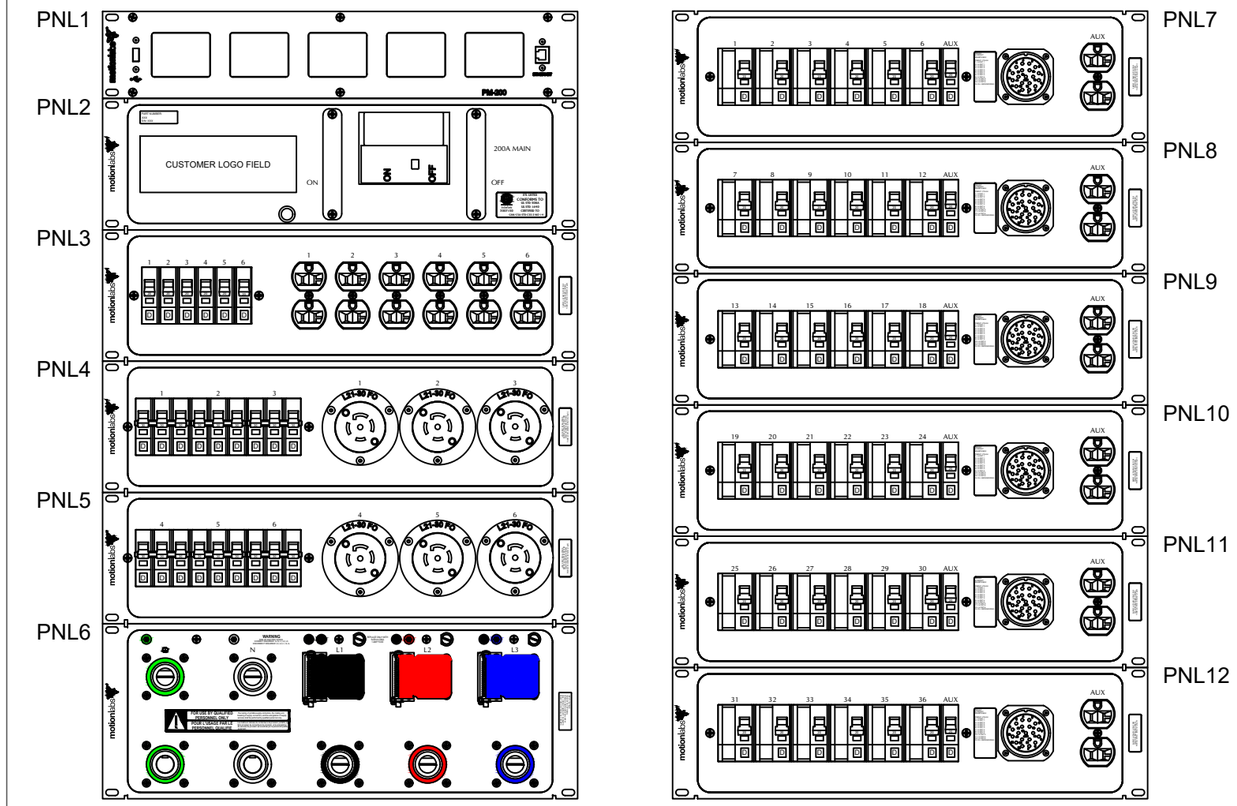

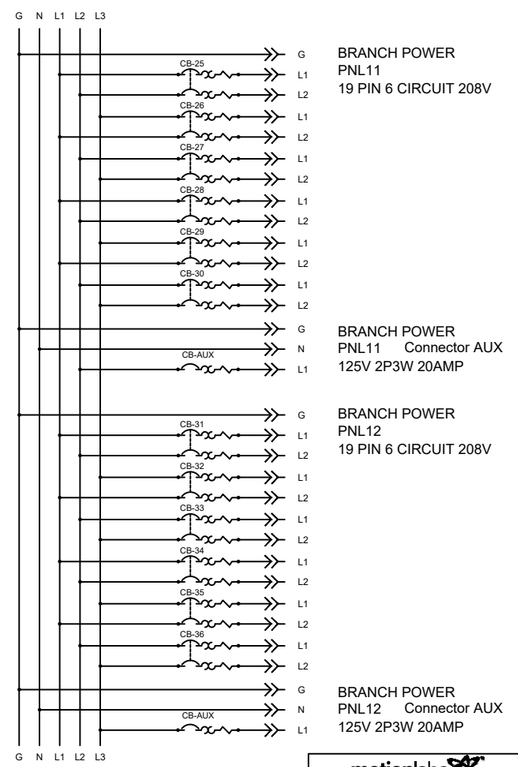

208VAC
6 CIRCUIT
20AMPS MAX

PINOUT: P19-04
1 = H CKT 1
2 = H CKT 1
3 = H CKT 2
4 = H CKT 2
5 = H CKT 3
6 = H CKT 3
7 = H CKT 4
8 = H CKT 4
9 = H CKT 5
10 = H CKT 5
11 = H CKT 6
12 = H CKT 6
13-19 = GROUND RING

REV	DESCRIPTION	DATE	APPROVED
B	"1300-200A-18-2-03" WAS "1300-HARVEST-040609". ML 9/27/23	9/29/23	JK

motionlabs
520 Furnace Dock Road Cortlandt Manor, NY 10567

Copyright © 2006 Motion Laboratories, Inc. All Rights Reserved. THIS DOCUMENT IS THE EXCLUSIVE, CONFIDENTIAL PROPERTY OF MOTION LABORATORIES, INC. AND IT SHALL NOT BE REPRODUCED, COPIED, OR USED FOR ANY PURPOSE WHATSOEVER, UNLESS, AND STRICTLY TO THE EXTENT, SUCH IS EXPRESSLY AUTHORIZED BY MOTION LABORATORIES, INC. IN WRITING.

TITLE: SCHEMATIC

DRAWN BY	DATE DRAWN	SIZE	DRAWING NUMBER	REV
JC	4/6/09	D	1300-200A-18-2-03	B
CHECKED BY	DATE CHECKED			
PH	4/6/09			

MODEL FILENAME & PATH: N:\Engineering\Schematics\Final Assembly\1300-200A-18-2-03 s.dwg

SHEET 1 OF 1