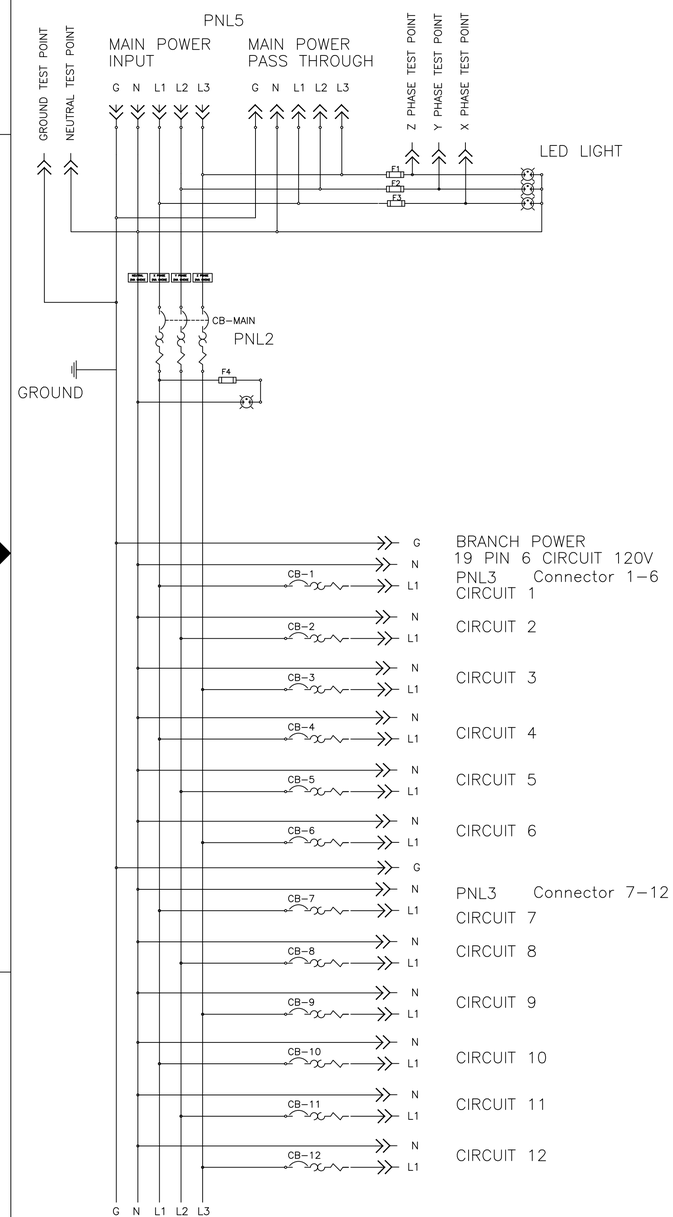

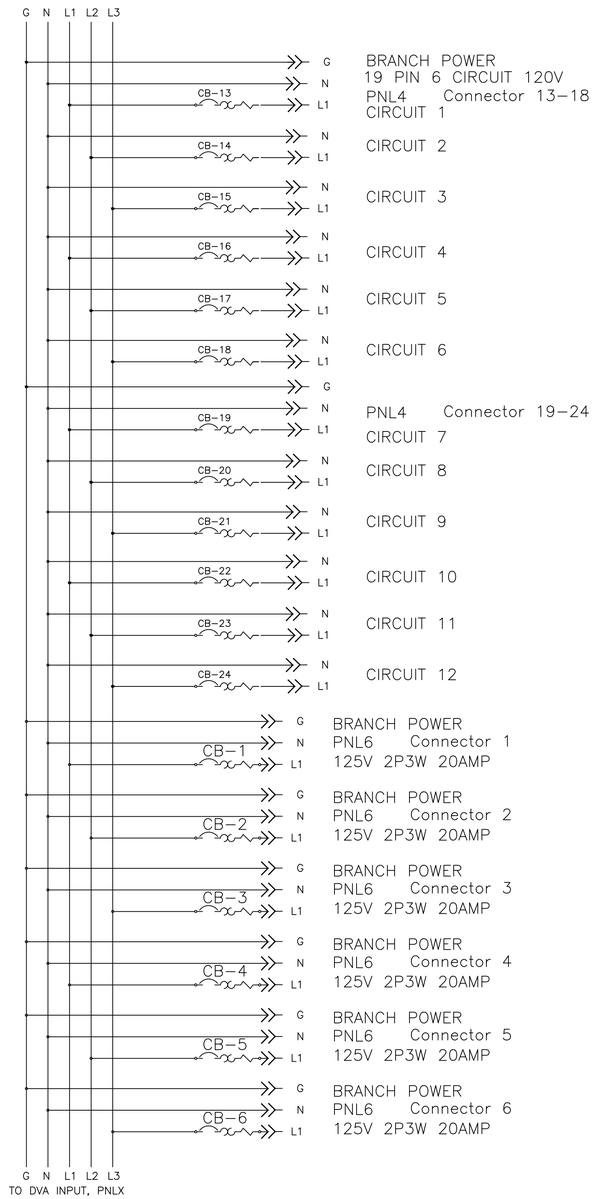

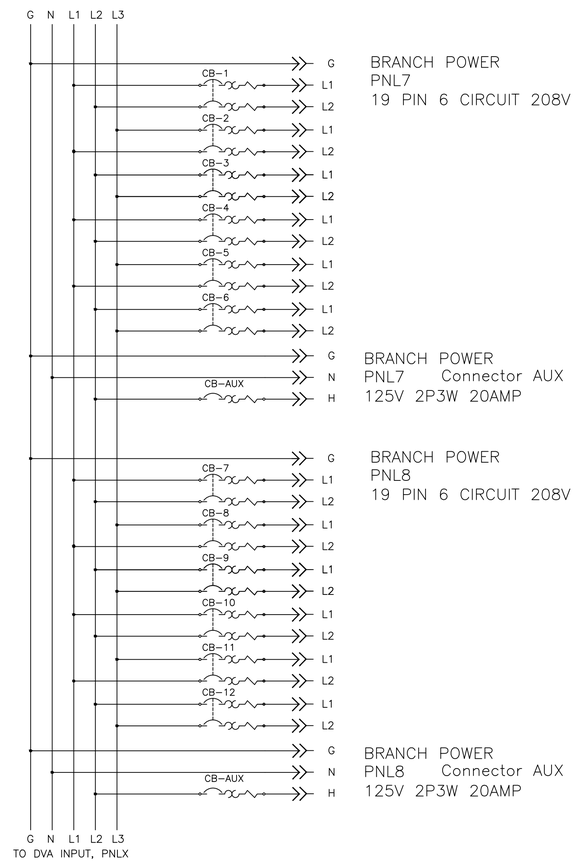

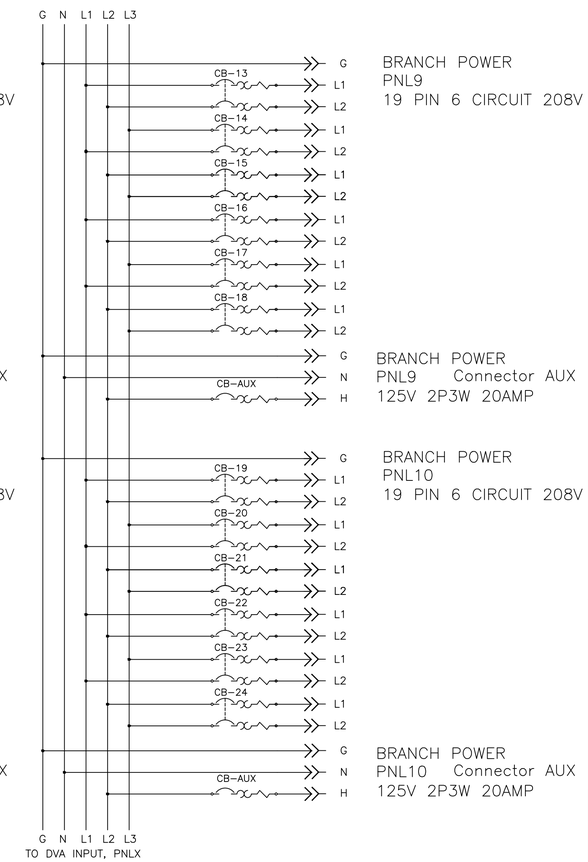

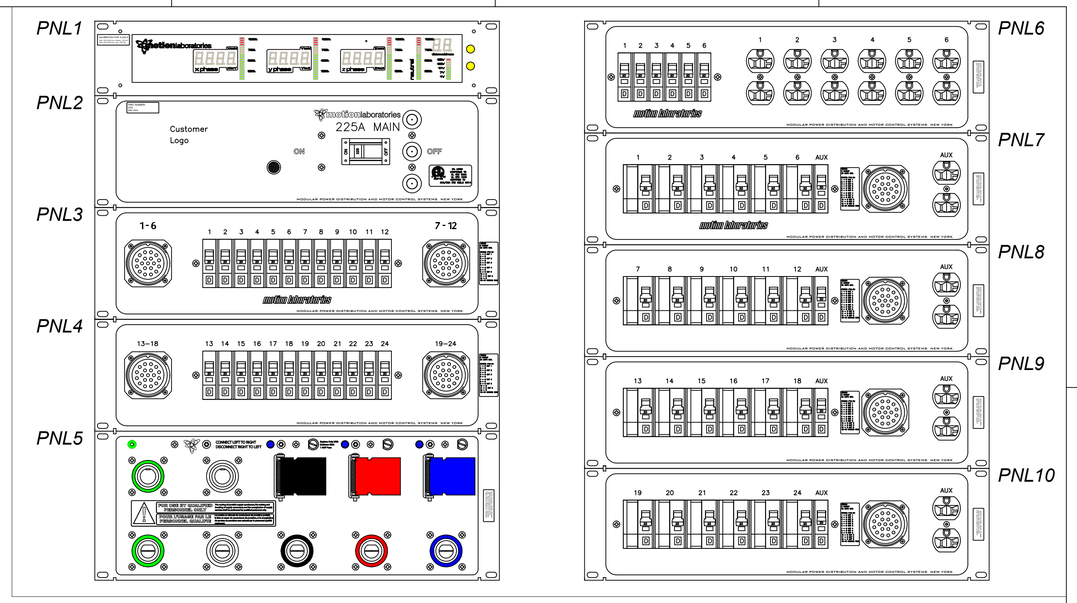

REV	DESCRIPTION	Date	APPROVED
B	Updated PNLS, Part # Changed from 1300-MiamiSC-100603	6/4/12	JC

motion laboratories
520 FUNACE DOCK ROAD
CORTLANDT MANOR, NY 10567
(914) 788-8877

TITLE: SCHEMATIC

SIZE	Checked By:	DWG NO.	REV
D	JC	1300-225A-15-2-00	B
Drawn By: JK		Sheet 1 of 1	